FLEX POST®
GSA Contract Holder
Impact Resistant Solutions for Bollards & Sign Posts
PARKING ONLY
888-307-6610
www.flexpostinc.com • sales@flexpost.net

Table of Contents

XL PRODUCT LINE

Heavy-Duty Flexible Sign Post 4-5

Heavy-Duty Flexible Bollard 6-7

Heavy-Duty Flexible Bollard with Post..... 8-9

STANDARD PRODUCT LINE

Standard Flexible Sign Post 10-11

Standard Flexible Bollard 12-13

Standard Flexible Bollard with Post 14-15

Standard Flexible Sign Post for Ground 16

Post-Lite™ 17

SM PRODUCT LINE

Flexpost-SM™ Channelizer Post.....18

Flexpost-SM™ Delineator Paddle 19

Flexpost® Accessories 20-21

THE ADVANTAGES OF CHOOSING FLEXPOST®

1

TOUGH
Made of steel and built to last

2

EASY TO INSTALL
Installs easily within 30 minutes
No special tools or bulky equipment needed

3

INCREASED SAFETY
Eliminate hazards caused by broken signposts and bollards

4

SAVE MONEY
Reduce expensive labor, repair and maintenance costs

5

HAPPY CUSTOMERS
Accidents happen – No harm done to your customer's vehicle, signpost or parking lot

Buy Online, Pick Up In Store Custom Installation

OUR HISTORY

FlexPost Inc. started in 2006 to help the owners of Rivertown Crossings Shopping Mall in Michigan. Their dilemma of replacing 20–30% of the rigid parking lot sign posts every year due to damage was all too common and expensive. To solve this problem, a flexible sign post was invented. FlexPosts are now being used all over the world!

Heavy-Duty Flexible Sign Post

XL-6'
XL-8'
XL-9'

ANCHORING OPTIONS:

CONCRETE

ASPHALT

ADHESIVE

HEAVY DUTY ASPHALT

Finished Height	Post Diameter
78"	2 3/8"
102"	2 3/8"
108"	2 3/8"
CUSTOM	2 3/8"

* Sign Sold Separately *

- Perfect Break-Fix Solution
- Make Speedy Repairs to Broken Sign Posts
- Takes Minutes to Install & No Special Tools Required
- Handles Large Regulatory Sized Signs
- Eliminates Damage to Parking Lot Surface

- Concealed Spring Technology
- Withstands Extreme Impacts & High Winds
- Lifetime Guaranteed Base
- ADA Compliant
- 2 3/8" Diameter Post
- Galvanized Base
- Surface Mounted

OPTIONAL DETENT BRACKET KIT

Galvanized steel detent brackets designed to keep the post extra rigid and tamper proof until it is struck by a vehicle.

Exploded View & Parts List

#	Quantity	Part Number	Dimensions & Description
1	1	RE-SB	Double Sided Sign Bracket Kit (Includes 2 Sign Brackets, 4 Set Screws, and 4 Lock Nuts)
2	2	1139864	5/16" - 18 x 1/2" Set Screw
3	1	A-XL-SK	8" x 8" Base & Spring Assembly
4	1	RE-XL-#P	2 3/8" Diameter Galv. Post - .055" Wall
5	1	1131832	3/4" Self Tapping Set Screw

4 CHOICE OF POST

POST LENGTH	ASSEMBLED HEIGHT
75"	78"
99" →	102"
105"	108"

Heavy-Duty Flexible Bollard

XL-B32
XL-B52
XL-B72

Finished Height	Post Diameter	Bollard Diameter
32"	2 3/8"	7"
52"	2 3/8"	7"
72"	2 3/8"	7"

ANCHORING OPTIONS:

CONCRETE | ASPHALT | ADHESIVE | HEAVY DUTY ASPHALT

Bollard Cover & Tape Color Options

- Deters Vehicle Impact
- Rigid Bollard Appearance
- Concealed Spring Technology
- Withstands Extreme Impacts & High Winds
- Lifetime Guaranteed Base
- 2 3/8" Diameter Post
- Galvanized Base
- Surface Mounted

- Eliminates Damage to Cars and Parking Lot Surfaces
- Takes Minutes to Install
- No Special Tools Required
- Indestructible Base

Exploded View & Parts List

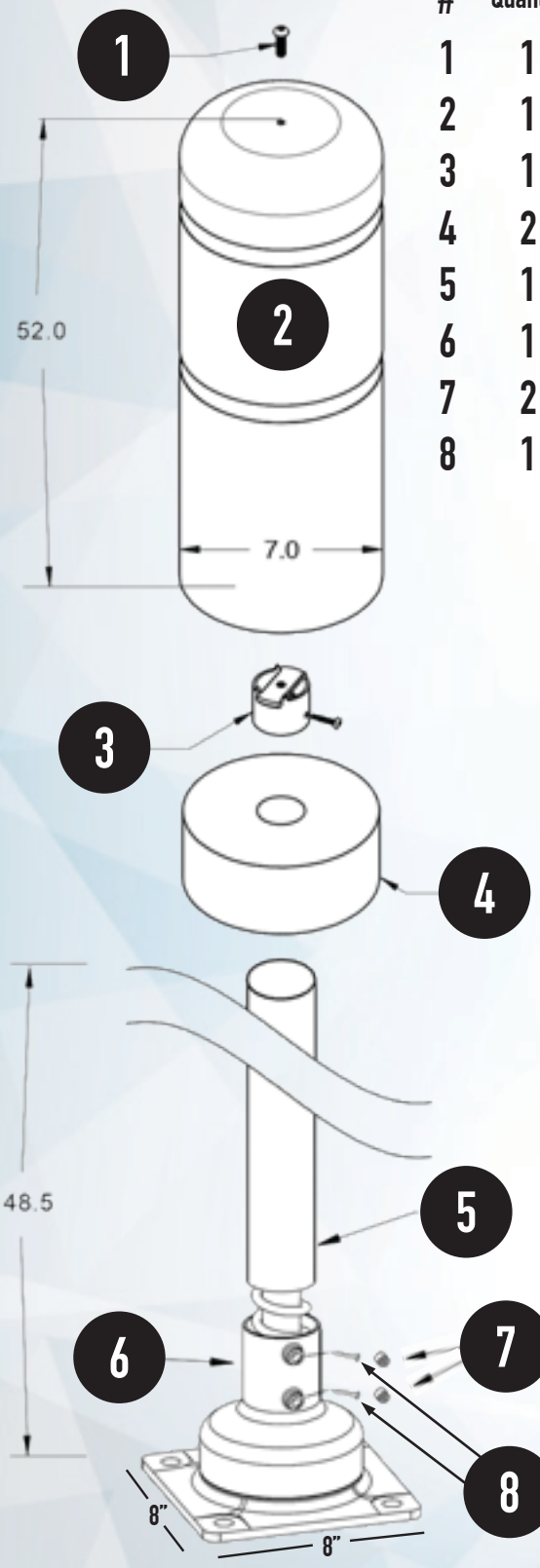

#	Quantity	Part Number	Dimensions & Description
1	1	73780	5/16" – 18" x 1" Hex Drive Cap Screw
2	1	RE-BC52	52" x 7" Bollard Cover
3	1	RE-XL-BC	Anti-Rotate Bollard Cap Kit
4	2	RE-FR-7	7" Foam Spacer Ring
5	1	RE-XL-47P	48.5" x 2 3/8" Steel Post – .055" Wall
6	1	A-XL-SK	8" x 8" Base & Spring Assembly
7	2	1139864	5/16" – 18 x 1/2" Set Screw
8	1	1131832	3/4" Self Tapping Set Screw

Heavy-Duty Flexible Bollard with Post

XL-B52/8
XL-B52/9

Finished Height	Post Diameter	Bollard Diameter
78"	2 3/8"	7"
102"	2 3/8"	7"
108"	2 3/8"	7"

- Deters Vehicle Impact
- ADA Compliant
- Suited for Large Regulatory Signs
- Rigid Bollard Appearance
- Concealed Spring Technology
- Withstands Extreme Impacts & High Winds
- Lifetime Guaranteed Base
- 2 3/8" Diameter Post
- Galvanized Base
- Surface Mounted

* Sign Sold Separately *

ANCHORING OPTIONS:

CONCRETE

ASPHALT

ADHESIVE

HEAVY DUTY ASPHALT

Bollard Cover & Tape Color Options

- Perfect Break-Fix Solution
- Make Speedy Repairs to Broken Sign Posts
- Takes Minutes to Install
- No Special Tools Required
- Eliminates Damage to Cars and Parking Lot Surfaces
- Indestructible Base

Exploded View & Parts List

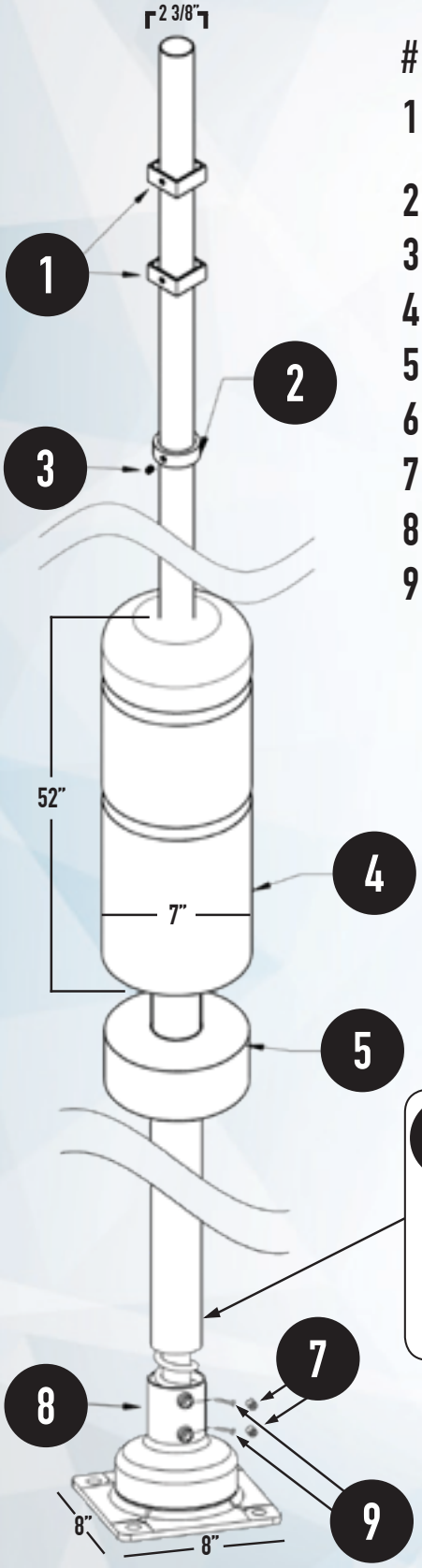

#	Quantity	Part Number	Dimensions & Description
1	1	RE-SB	Double Sided Sign Bracket Kit (Includes 2 Sign Brackets, 4 Set Screws, and 4 Lock Nuts)
2	1	RE-CK3	3" Round Collar Ring
3	1	73278	Set Screw for Collar
4	1	RE-BC52	52" x 7" Bollard Cover
5	2	RE-FR-7	7" Foam Spacer Ring
6	1	RE-XL-#P	2 3/8" Diameter Galv. Post - .055" Wall
7	2	1139864	5/16" - 18 x 1/2" Set Screw
8	1	A-XL-SK	8" x 8" Base & Spring Assembly
9	1	1131832	3/4" Self Tapping Set Screw

6 CHOICE OF POST

POST LENGTH	ASSEMBLED HEIGHT
75"	78"
99"	102"
105"	108"

Standard Flexible Sign Post

STD-6'
STD-8'

* Sign Sold Separately *

Finished Height	Post Diameter
78"	1 5/8"
102"	1 5/8"
CUSTOM	1 5/8"

ANCHORING OPTIONS:

CONCRETE ASPHALT ADHESIVE GROUND

- Patented Torsion Spring
- Withstands Repeated Impacts
- Standard Manufacturer's Warranty
- ADA Compliant
- 1 5/8" Diameter Post
- Powder Coated Base
- Surface Mounted

- Perfect Break-Fix Solution
- Make Speedy Repairs to Broken Sign Posts
- Takes Minutes to Install
- No Special Tools Required
- Handles Standard Sized Signs
- Eliminates Damage to Parking Lot Surface

Exploded View & Parts List

#	Quantity	Part Number	Dimensions & Description
1	2	37030	1/2" – 13 Lock Nut – Zinc
2	1	RE-SK	Patented Torsion Spring
3	1	RE-#P	Choice of 6' or 8' x 1 5/8" Post – .055" Wall
4	1	RE-BP	9" x 9" Square Base Plate
5	4	33012	1/2" x 1.375" Flat Washer – Zinc
6	2	13824	1/2" – 13 x 3" Tap Bolt – Zinc
7	1	RE-SB	Double Sided Sign Bracket Kit (Includes 2 Sign Brackets, 4 Set Screws, and 4 Lock Nuts)

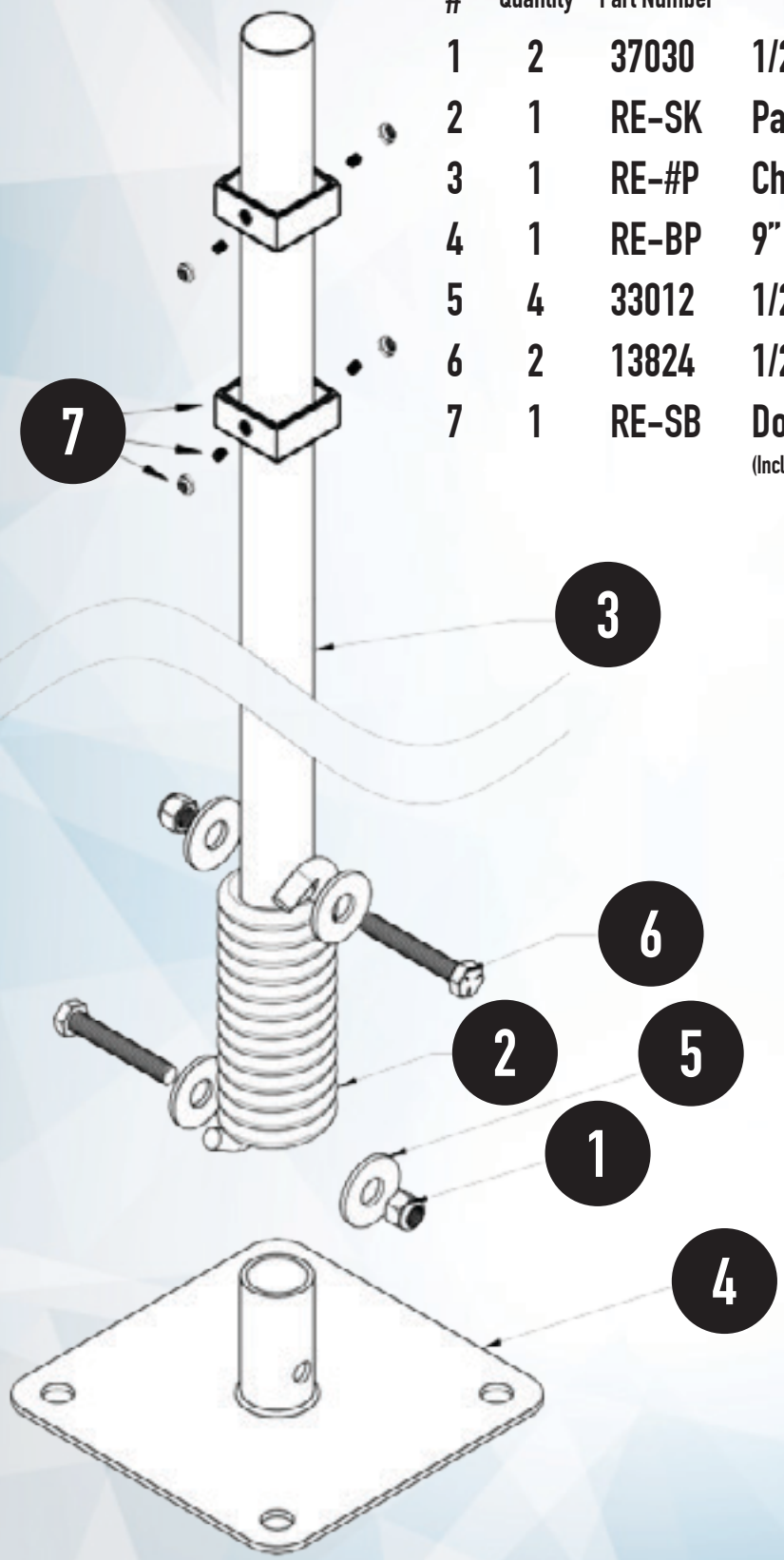

Standard Flexible Bollard

STD-B32
STD-B52
STD-B72

Finished Height	Post Diameter	Bollard Diameter
32"	1 5/8"	7"
52"	1 5/8"	7"
72"	1 5/8"	7"

ANCHORING OPTIONS:

CONCRETE ASPHALT ADHESIVE GROUND

Bollard Cover & Tape Color Options

- Deters Vehicle Impact
- Rigid Bollard Appearance
- Patented Torsion Spring
- Withstands Repeated Impacts
- Standard Manufacturer's Warranty
- 1 5/8" Diameter Post
- Powder Coated Base
- Surface Mounted

- Eliminates Damage to Cars and Parking Lot Surfaces
- Takes Minutes to Install
- No Special Tools Required

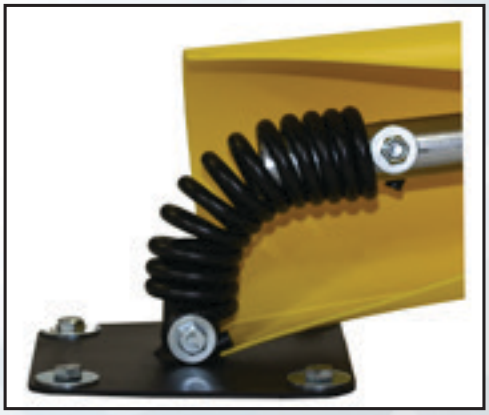

ADA Sticker Available

Exploded View & Parts List

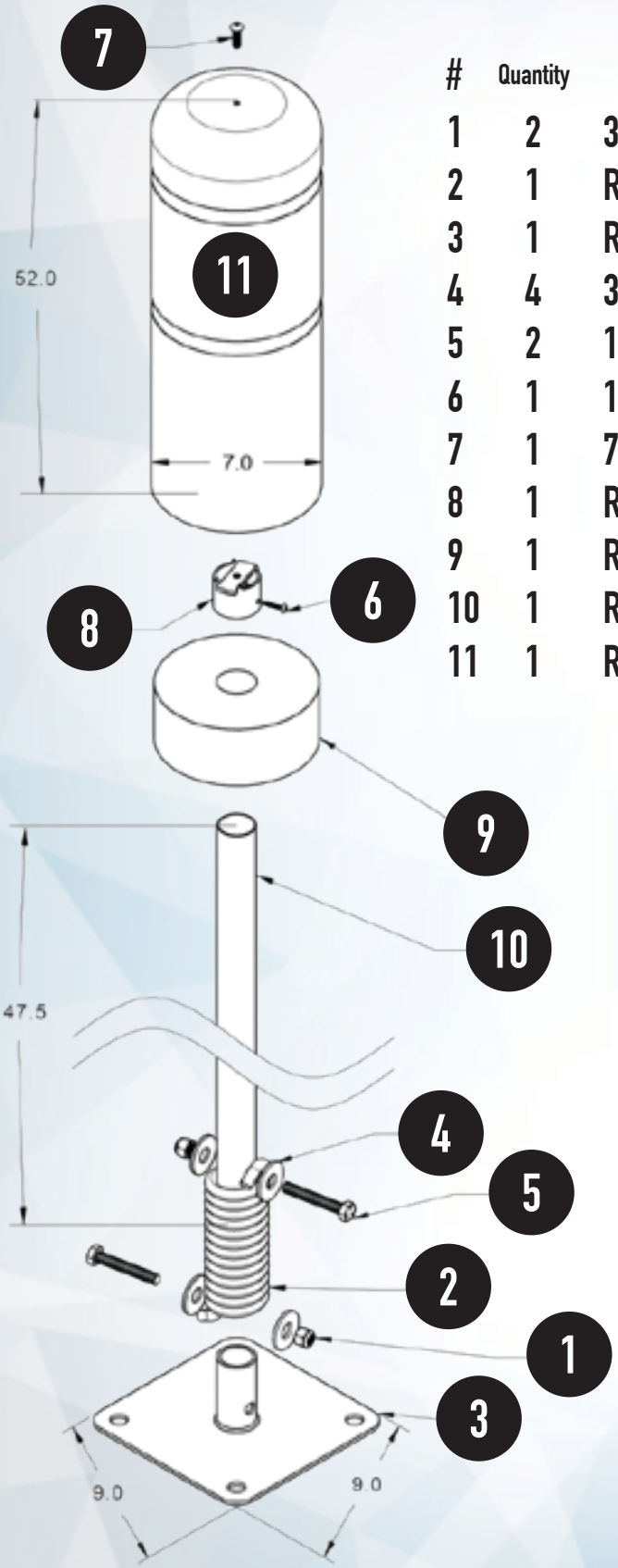

#	Quantity	Part Number	Dimensions & Description
1	2	37030	1/2"-13 Lock Nut - Zinc
2	1	RE-SK	Patented Torsion Spring
3	1	RE-BP	9" x 9" Square Base Plate
4	4	33012	1/2" x 1.375" Flat Washer - Zinc
5	2	13824	1/2"-13 x 3" Tap Bolt - Zinc
6	1	11253669	10 x 1/2" Self Tapping Screw
7	1	73780	5/16"-18 x 1" Cap Screw
8	1	RE-CP	Anti-Rotate Bollard Cap
9	1	RE-FR-7	7" Foam Spacer Ring
10	1	RE-47P	1 5/8" x 47.5" Galv. Steel Post - .055
11	1	RE-BC52	52" x 7" Bollard Cover

Standard Flexible Bollard with Post

STD-B52/8

ANCHORING OPTIONS:

CONCRETE ASPHALT ADHESIVE GROUND

Bollard Cover & Tape Color Options

Finished Height	Post Diameter	Bollard Diameter
102"	1 5/8"	7"

* Sign Sold Separately *

- Deters Vehicle Impact
- ADA Compliant
- Rigid Bollard Appearance
- Patented Torsion Spring
- Suited for Standard Sized Sign
- Withstands Repeated Impacts
- Standard Manufacturer's Warranty
- 1 5/8" Diameter Post
- Powder Coated Base
- Surface Mounted

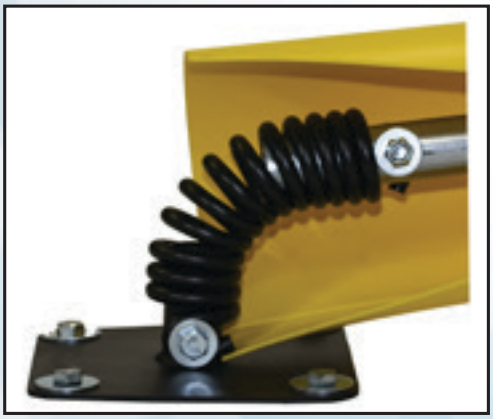

- Perfect Break-Fix Solution
- Make Speedy Repairs to Broken Sign Posts
- Takes Minutes to Install
- No Special Tools Required
- Eliminates Damage to Cars and Parking Lot Surfaces

Exploded View & Parts List

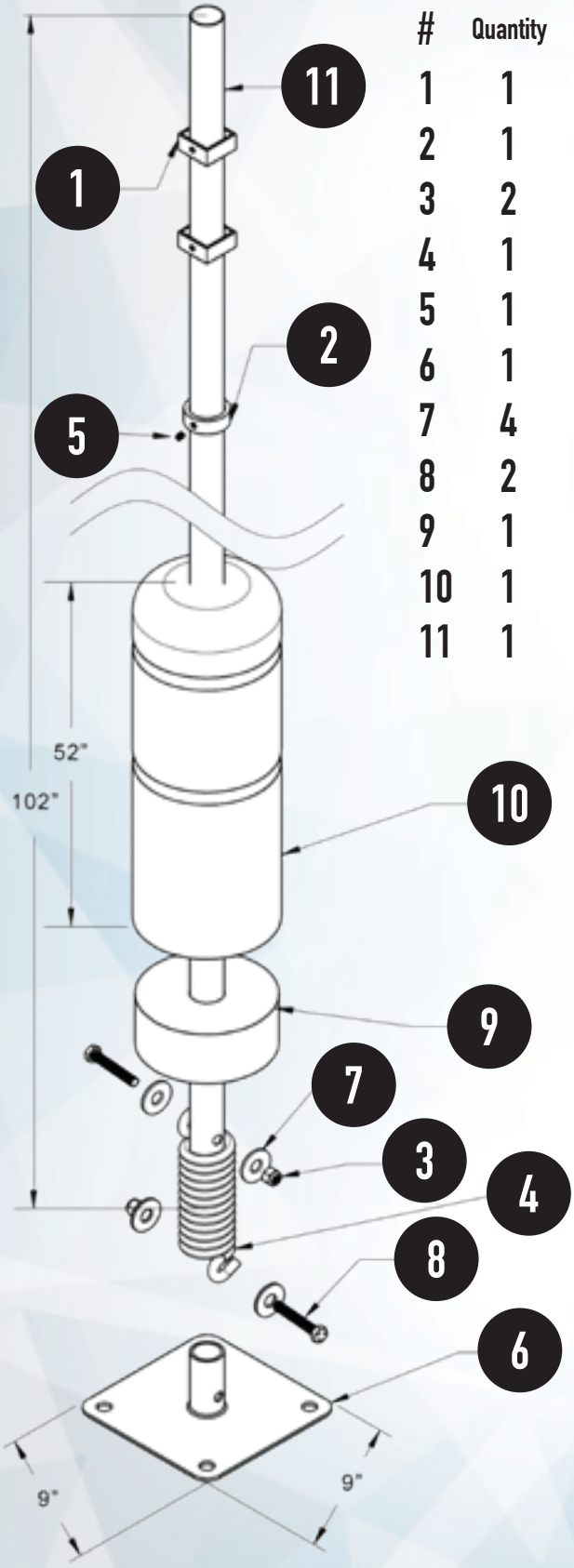

#	Quantity	Part Number	Dimensions & Description
1	1	RE-SB	Double Sided Sign Bracket Kit
2	1	RE-CK225	2.25" Round Collar Ring
3	2	37030	1/2"-13 Lock Nut - Zinc
4	1	RE-SK	Patented Torsion Spring
5	1	73278	5/16"-18 x 3/8" Set Screw
6	1	RE-BP	9"x9" Square Base Plate
7	4	33012	1/2" x 1.375" Flat Washer - Zinc
8	2	13824	1/2"-13 x 3" Tap Bolt - Zinc
9	1	RE-FR-7	7" Foam Spacer Ring
10	1	RE-BC52	52" x 7" Bollard Cover
11	1	RE-8P	1 5/8" x 8' Galv. Steel Post - .055

(6' Pole Available Upon Request)

Standard Ground Flexible Sign Post

STD-G

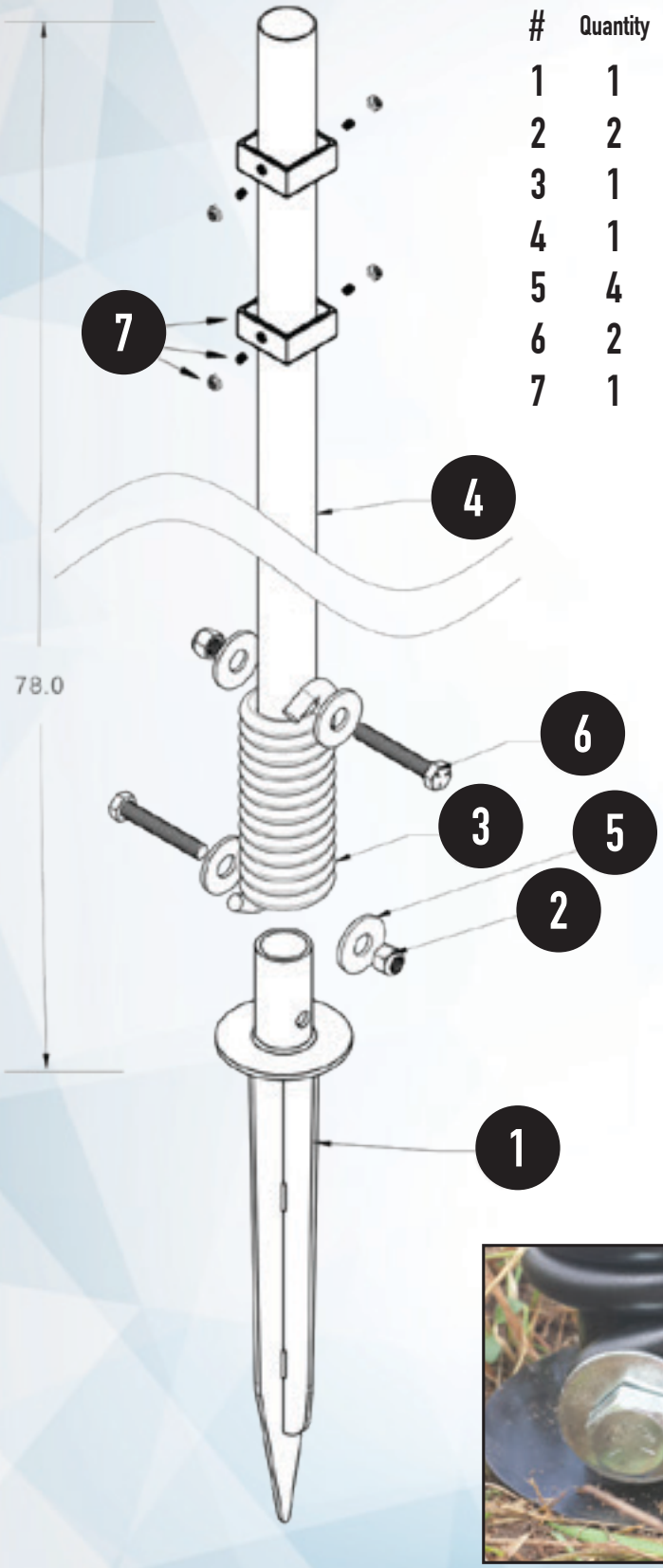

#	Quantity	Part Number	Dimensions & Description
1	1	RE-GS	21" Ground Spike, Powder Coated
2	2	37030	1/2" - 13 Lock Nut - Zinc
3	1	RE-SK	Patented Torsion Spring
4	1	RE-6P	1 5/8" x 6' Galv. Steel Post - .055"
5	4	33012	1/2" x 1.375" Flat Washer - Zinc
6	2	13824	1/2" - 13 x 3" Tap Bolt - Zinc
7	1	RE-SB	Double Sided Sign Bracket Kit (Includes 2 Sign Brackets, 4 Set Screws, and 4 Lock Nuts)

A-PL-STD
A-PL-XL

Post-Lite™

Post-Lite™

- Solar Panel: Poly-Silicon 6v 120 mA
- Solar Charge Time: 8 hours
- Working Temperature: -5° to 120° F
- Rainproof & Durable
- Brightness: 60 lumens
- Rechargeable and Replaceable Battery (AA)

ASSEMBLY GUIDE

1. Remove black top
2. Switch unit to the on position
3. Slide the black top back into the clear bottom
4. Place tape (not provided) over the three connections
5. Put unit over post
6. Drill 2 tap screws (provided) through holes in the black cap and into the post to secure.

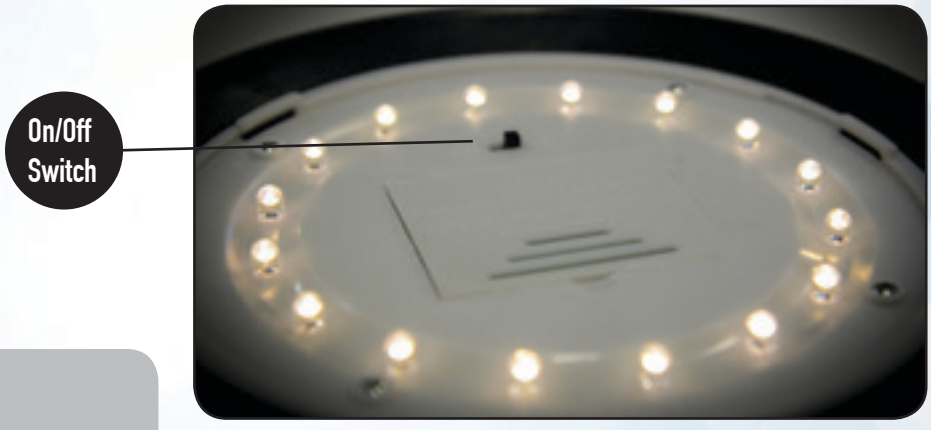

16 LED Solar Charged Lights

Optically Controlled: Turns on at night and off during the day.

- IMPORTANT -

- Allow 8 hours of charging before first use
- Angle solar panel to the south to maximize charging
- One year limited warranty for manufacturer defects
- Please call us to return the defective unit

FlexPost - SM™ Channelizer Post

SM-42P
SM-55P

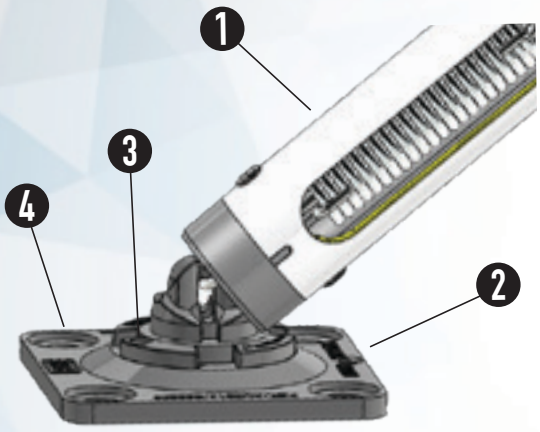

1. 1 Channelizer Post
2. 1 Turn & Lock Base Plate
3. 1 Set Screw
4. Anchoring System

CHOICE OF CONCRETE, ASPHALT, ADHESIVE, OR GROUND ANCHORING

Finished Height	Post Diameter
42"	1 7/8"
55"	1 7/8"

- Protects Vehicles from Damage
- Eliminates Damage to Parking Lot Surface
- Quick & Easy Installation
- 360° of Flexibility
- 1/8" thick impact and UV resistant Acrylic / PVC
- Withstands repeated 35 MPH impacts
- Contains rugged internal steel zinc-coated spring
- Sign Brackets sold separately

SM-DP

FlexPost - SM™ Delineator Paddle

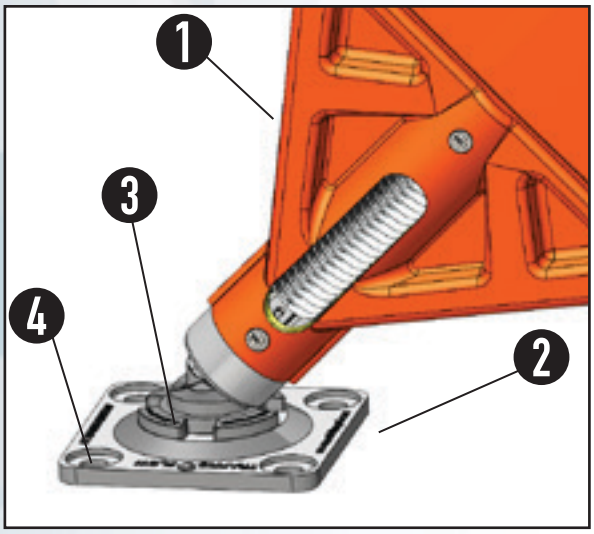

1. 1 Channelizer Post
2. 1 Turn & Lock Base Plate
3. 1 Set Screw
4. Anchoring System

CHOICE OF CONCRETE, ASPHALT, ADHESIVE, OR GROUND ANCHORING

- Stands 41" tall by 9" wide
- Withstands repeated 35 MPH impacts
- Made of 1/8" thick impact and UV resistant HDPE
- Offers 360° flexibility
- Contains rugged internal steel zinc-coated spring
- Eliminates damage to parking lot surface
- Protects vehicle from unnecessary damage
- Takes minutes to install with no special tools required

29.5" x 7.5" Decals Sold Separately

AVAILABLE DECALS:

* Custom Decals Available *

FlexPost® Accessories

ANCHORING SOLUTIONS

ADHESIVE: STD & XL: RE-D SM: RE-SM-D

CONCRETE:
STD & XL: RE-C
SM: RE-SM-C

ASPHALT:
STD & XL: RE-A
SM: RE-SM-A

GROUND SPIKE:
STD: RE-GS
SM: RE-SM-GS
XL: RE-XL-GS

SIGN BRACKETS

DOUBLE SIDED • 2 BRACKETS PER KIT • NO DRILLING REQUIRED

STANDARD: A-SB
XL PRODUCT: A-XL-SB
SM PRODUCT: A-SM-SB

MOBILE BASE

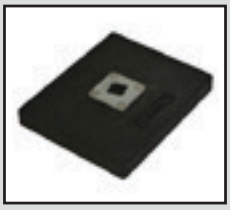

• A-SM-PB18

Available for use with our SM Product Line

Paddle Sold Separately

REPLACEMENT SPRING KIT

Includes Spring & Hardware

• RE-SK

BASES

STANDARD:
• RE-BP

XL PRODUCT:
• RE-XL-SK

SM PRODUCT:
• A-SM-BP

POST SLEEVES

To Fit 6' Pole: • A-PS6
To Fit 8' Pole: • A-PS8

POST-LITE™

• A-PL-STD
• A-PL-XL

ADA DECAL
• A-ADA

DETENT BRACKET KIT
FOR XL PRODUCT ONLY
• A-XL-DK

SPRING COVER
FOR STANDARD PRODUCT ONLY
• A-SC

BOLLARD COVERS

4.5" or 7" Wide 32", 52", or 72" Tall

Bollard Cover & Tape Color Options:

Y R Bu Bk W Gn O Gy

- RE-BC

DELINEATOR & BOLLARD DECALS

29.5" x 7.5" decals are for use with a bollard or the SM-Delineator Paddle

A-PED-S

A-PED

A-YBCD

A-YBDD

A-RWDD

FlexPostInc
@Flexpost_Inc
Flexpost-Inc
FlexpostInc
FLEX POST®
888-307-6610
www.flexpostinc.com • sales@flexpost.net
2236 112th Ave, Suite 80
Holland, MI 49424
888-307-6610
339 1/2 Centre St.
Petrolia, ON N0N1R0
519-882-2711
REVISED 1/1/2020